i-LOTUS

What's Leading You

i-Lotus Corporation Pte Ltd

www.ilotus.com.sg
sales@ilotus.com.sg

RX Oncore

Advanced GPS Module

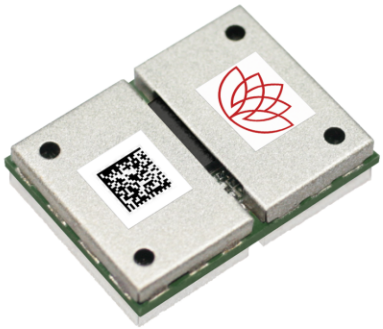

Technical Data Sheet

Abstract

This document serves to describe the hardware features and specifications of the cost effective, small size and high-performance i-Lotus RX Oncore GPS receiver module.

The Oncore series of GPS receivers feature easily integrated, high performance, and cost-effective solutions for numerous application environments.

What's Leading You

Document Number: 400 – GPS – 070

The information contained in this document is for use in acceptance of the i-Lotus terms and conditions, and may be subject to change without notice. This information can be downloaded from www.ilotus.com.sg.

This documentation does not represent a commitment or warranty on the part of i-Lotus.

i-Lotus Corporation Pte Ltd, All rights reserved. No part of this publication may be reproduced, altered, transmitted, stored in a retrieval system, or translated into any other language by any means, without written consent of i-Lotus.

is a registered trademark of

i-Lotus Corporation Pte Ltd, and **i-Lotus International Pte Ltd**.

© 2010, **i-Lotus Pte Ltd**. Printed in Singapore.

If you require any assistance or have any queries regarding any of the i-Lotus products, contact your regional i-Lotus customer representative.

Document Number: 400 – GPS – 070

Contents

Page

1 Introduction 4

1.1 Overview 4

1.2 Key Features 4

2 Performance Specifications 5

3 Hardware Overview 7

3.1 Overview 7

3.2 Feature Summary 8

3.3 Hardware Interface Overview 9

3.4 Power Modes 9

3.4.1 Tracking 9

3.4.2 Sleep mode 9

3.4.3 Standby 9

3.5 GPS Antenna detection 10

4 Module Pin Layout 11

5 Pin Definition 13

6 Mechanical Dimensions 14

7 Packaging Detail 16

8 Module Installation Considerations 17

8.1 Electrostatic Precautions 17

8.2 Electromagnetic Considerations 17

8.3 RF Shielding 17

8.4 RoHS Consideration 18

8.5 SMT Reflow Profile 18

9 Ordering Information 19

1 Introduction

1.1 Overview

The RX Oncore is a high performance GPS receiver featuring the ALL NEW Smart-Start™ Technology and supporting AGPS and SBAS augmentation systems. With a sensitivity of up to -159 dBm, this industrial grade receiver features Auto-Startup and is capable of tracking 16 satellites simultaneously. This cost effective solution is custom designed to be applied in an extensive variety of GPS applications where superior performance, precise location, reliability and easy integration are paramount.

Extending the intelligence, quality, and market impact our current technological advances have on the industry, the RX Oncore uniquely defines a balance between high-performance and cost-effectiveness in the development of this complete and vastly flexible GPS receiver.

1.2 Key Features

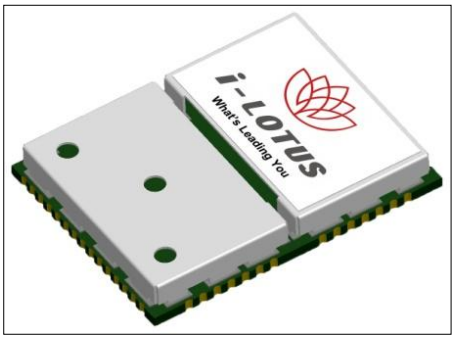

Fig. 1.1 RX Oncore module

- Miniature Size (17.0 x 22.4 x 3.0mm) [1]
- Tracking Sensitivity up to -159 dBm
- Low Power Consumption
- 16 satellite simultaneous tracking
- Auto NMEA output
- 1/30 to 4Hz Configurable Output Rate
- Horizontal Accuracy of <2.0m (Unassisted 2D Position accuracy)
- Supports AGPS, SBAS (WAAS, EGNOS, MSAS)
- Supports UART, USB, CAN[2] interfaces
- RoHS Compliant

[1] Without shield

[2] Optional

2 Performance Specifications

PARAMETERS	SPECIFICATIONS
General Characteristics	
Receiver Architecture	16 Channels L1 1575.42 MHz C/A Code (1.023 MHz chip rate) Code plus carrier tracking (carrier aided tracking)
Signal Tracked	L1, C/A Code, AGPS, SBAS (WAAS, EGNOS, MSAS)
Tracking Capability	16 simultaneous satellite vehicles
Dimensions	
Length	17.0 mm
Width	22.4 mm
Height	3.5 mm (with shield)
Shielded	Yes
Performance Characteristics	
Acquisition Time (TTFF)	
Autonomous Mode	
Cold Start	< 32.0 s
Warm Start	< 21.0 s
Hot Start	< 1.5 s
Accuracy	
Autonomous Mode	
Horizontal Position Error at 50% probable	< 2.5 m, 1-sigma < 2.0 m, SBAS
Altitude	-1,500 m to 18,000 m
Velocity	515 m/sec
Sensitivity	
Acquisition	-146 dBm
Tracking	-159 dBm
Max Update Rate	4 Hz
1PPS	Not Supported
Electrical Characteristics	
Main Power Supply (Vcc)	
Voltage Range	3.0 to 3.6 VDC : (Nominal 3.3 VDC)
Power Consumption	
Acquisition	75 mA @3.3V
Standby Mode	55 uA @3.3V
Digital I/O Interface (V_{IO}=3.3V)	
Input High Voltage (V_{IH})	0.7*V_{CC} to V_{CC}+0.3V
Input Low Voltage (V_{IL})	-0.3 to 0.3*V_{CC}
Input Hysteresis CMOS Schmitt Trigger	Min. 400mV
Output High Voltage @ 4mA (V_{OH})	Min. V_{CC}-0.8V
Output Low Voltage @ 4mA (V_{OL})	Max. 0.4V

Interface Communication port	UART USB CAN (Optional)
Antenna Support Active/Passive	Both Bias Voltage : 3.0 ~ 5.5V (6V max) Bias current : 120mA Antenna Sense Circuit
Output Sentences	Latitude, longitude, height, velocity, heading, time NMEA 0183 (GGA, GLL, GSA, GSV, RMC, VTG, ZDA)
Commands Supported	NMEA 0183 messages i-Lotus NMEA Protocols
Environmental Characteristics Operating Temperature Storage Temperature Humidity (Moisture) ROHS compliant	 -40 to +85°C -55 to +105°C Humidity RH(1'25g/m3) Yes
RTC 32.768KHz RTC	Internal
Standard Features NMEA Output Setup Configuration Memory	 Auto NMEA output up to 4Hz Saved to flash (non-volatile memory) Built-in flash memory (256 KB + 16 KB)

3 Hardware Overview

Below is a simplified functional block diagram of the RX Oncore receiver.

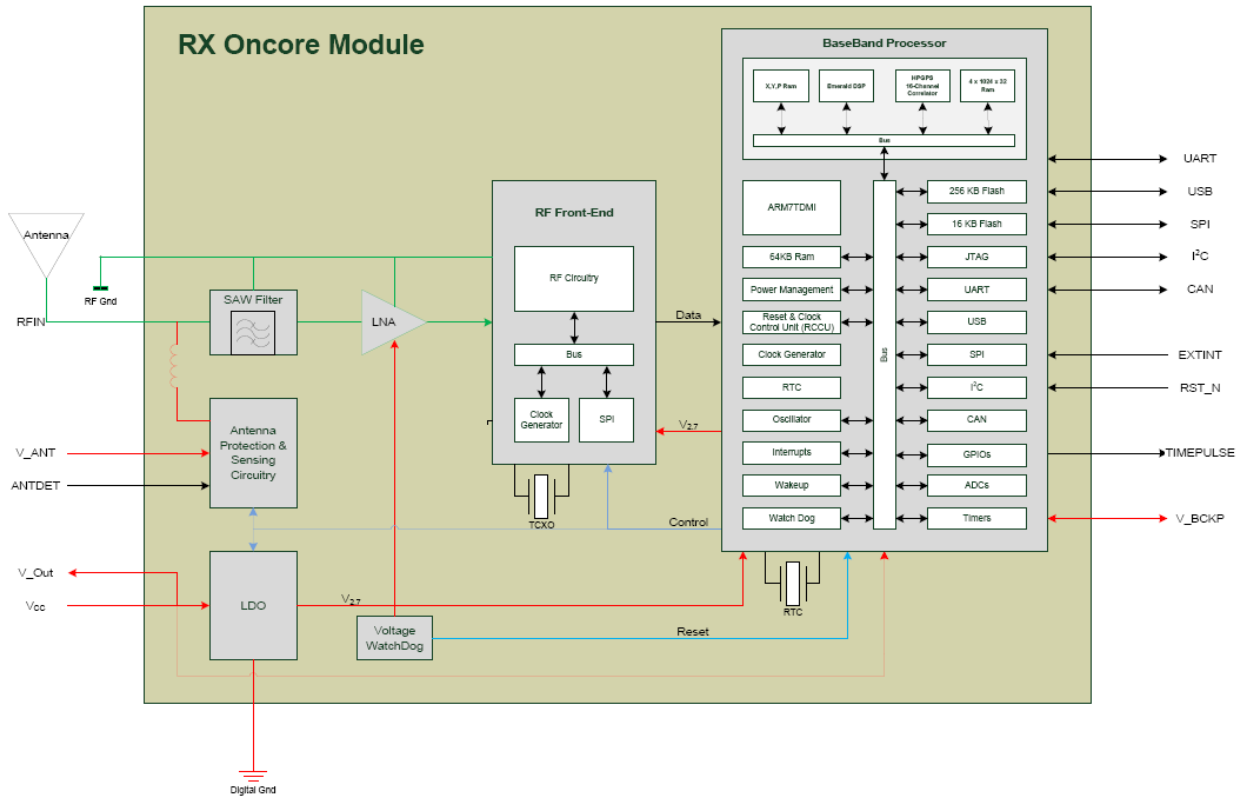

Fig 3.1 Functional Block Diagram

3.1 Overview

By combining the ARM7TDMI microcontroller core with on-chip Flash and RAM, 16-Channel correlator DSP, RF Front-end and an extensive range of interfaces on a single module solution, the RX Oncore provides a highly-flexible and cost-effective solution for any GPS application.

3.2 Feature Summary

- ARM7TDMI 16/32 bit RISC CPU based host microcontroller running at a frequency up to 66 MHz.
- Complete Embedded Memory System:
  - ✓ FLASH 256 Kbytes + 16 Kbytes (100K erasing/programming cycles)
  - ✓ RAM 64 Kbytes.
- 16 channel High performance GPS correlation DSP
- ST Proprietary Technology:
  - ✓ CMOS Flash Embedded Technology for Baseband
  - ✓ BiCMOS Sige for Radio Front-end
- -40°C to 85°C Operating temperature range
- SBAS (WAAS and EGNOS) supported
- Power Supply:
  - ✓ 3.0V to 3.6V operating supply range for Input/output periphery
  - ✓ 3.0V to 3.6V operating supply range for A/D Converter reference
  - ✓ 1.8V operating supply range for core supply provided by internal Voltage Regulator
  - ✓ 2.7V operating supply range for RF Front-end section
- Reset and Clock Control Unit able to provide low power modes:
- Real time clock module with 32KHz low power oscillator and separate power supply to continue running during stand-by mode.
- 16-bit Watchdog Timer with 8 bits prescaler for system reliability and integrity.
- Extensive Range of Interface:
  - ✓ Serial Communication Interfaces (UART) allow full duplex, asynchronous, communications with external devices, independently programmable TX and RX baud rates up to 625K.
  - ✓ USB unit V1.1 compliant, software configurable endpoint setting, USB Suspend/Resume support.
  - ✓ Controller Area Network Interface (CAN) compliant with the CAN specification V2.0 part B (active) and bit rate can be programmed up to 1 MBaud. (Optional, with this option, this feature shares the same hardware pins as USB interface)
  - ✓ Inter-IC Interface (I^2C) Interface provides multi-master and slave functions, support normal and fast I^2C mode (400 KHz), 7/10 bit addressing modes. (Optional)
- RF Front-end Features:
  - ✓ LOW IF (4MHz) architecture
  - ✓ Compatible with GPS L1 signal
  - ✓ VGA Gain internally regulated
  - ✓ On-chip programmable PLL
  - ✓ SPI Interface

3.3 Hardware Interface Overview

The RX Oncore GPS module uses the STA8058 fully embedded GPS engine core chip set. This chipset features 64KB RAM and 256 KB + 16 KB Flash Memory in a single chip BGA package.

The GPS IC contains a 66-MHz ARM7TDMI 32 bit processor. The RX Oncore uses an internal frequency synthesizer to create all internal clocks from the 16.368MHz GPS clock. A 32 KHz oscillator is utilized as the real-time-clock (RTC).

3.4 Power Modes

RX Oncore can operate in the following power mode. Full powe, Sleep mode and Standby mode.

- Software command is needed to drive the device to sleep mode (where module is in low power wait for interrupt condition).
- RF will be disabled when device enters sleep mode and is enabled when it wakes up.
- To wake up, a command is sent through UART.
- Wake up procedure: send any command until the device replies with a message.

3.4.1 Tracking

Upon power up, the RX Oncore will run in *Full Power Mode*, and will immediately search for all visible satellites available.

3.4.2 Sleep mode

The RX Oncore can be toggled between *Sleep Mode* and *Full Power Mode* by entering a **software command**. The following is an example of how to enter and recover from a sleep mode using the i-Lotus NMEA protocols. For full details, please refer to the i-Lotus NMEA Protocols Specifications.

When the RX Oncore is in *Full Power Mode*, it can be set to *Sleep Mode* by entering the **$PSTMiMPM,2** software command.

When the RX Oncore is in *Sleep Mode*, it can be restored to *Full Power Mode* by entering the **$SPTMiMPM,0** software command.

3.4.3 Standby

The RX Oncore can only be toggled between *Full Power Mode* and *Standby Mode* by pulling the hardware control on the **WAKEUP pin**.

When the RX Oncore is in *Full Power Mode*, it can be set to *Standby Mode* by pulling the hardware control on the **WAKEUP pin LOW**.

When the RX Oncore is in *Standby Mode*, it can be restored to *Full Power Mode* by pulling the hardware control on the **WAKEUP pin HIGH**.

3.5 GPS Antenna detection

RX Oncore supports both Active and Passive antenna. When an active antenna is connected, the built in antenna sense circuit is able to provide the following functions.

- To support active GPS antenna (5V), V_{ANT} connected to 3~5V supply. RX Oncore supports 3V or 5V active antenna only.

  Detection status:

  - Active antenna connected
  - No active antenna connected
  - Antenna short circuit

- To support passive GPS Antenna, tie V_{ANT} to GND
- When short circuit was detected, the voltage supply to the antenna will be automatically shut down.

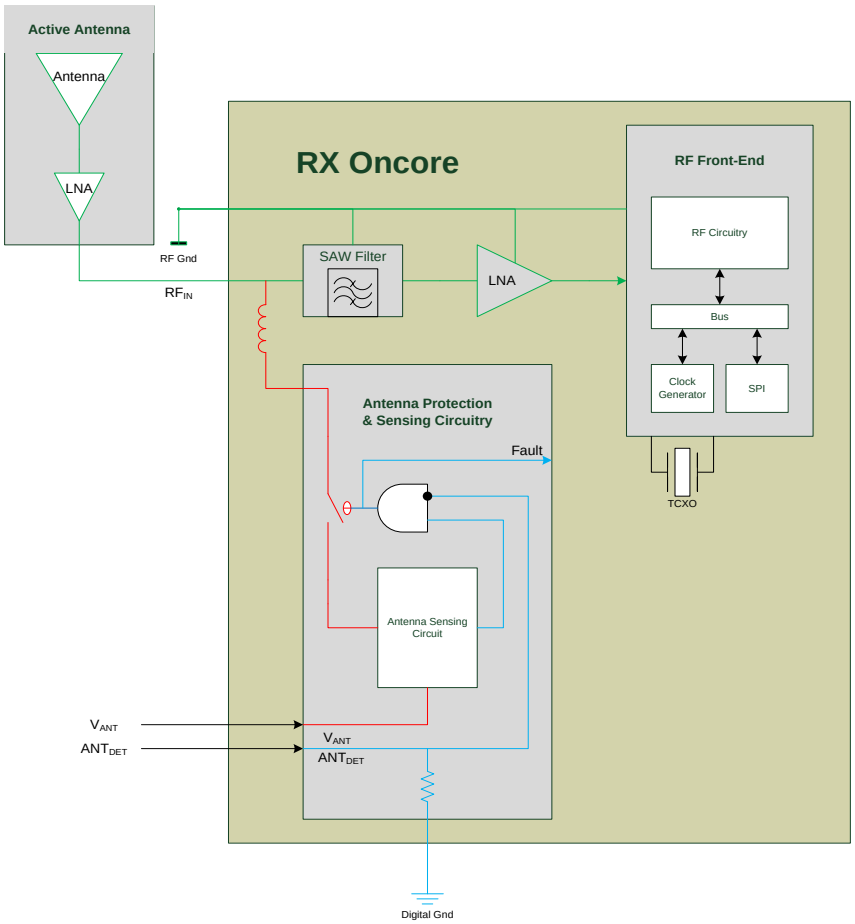

Fig 3.2 Antenna Block Diagram

3.6 Inbuilt Module Information

For every RX Oncore, the following product details are stored in flash (Non-Volatile Memory, Write Protected)

- ✓ Product ID
- ✓ Hardware drawing part number
- ✓ Serial Number
- ✓ Manufacturing date
- ✓ GPS Library Version

3.7 Satellite Based Augmentation System (SBAS)

RX Oncore supports the following Satellite Based Augmentation System (SBAS), WAAS, EGNOS and MSAS.

The following settings should be used in each respective country:

<%d> = 0 for the receiver to auto search for the SBAS satellite

In WAAS system region, (USA, Canada and Mexico)
<%d> = 122 for Inmarsat 3F4 AOR-W 54.0° West

<%d> = 134 for Inmarsat 3F3 POR 178.0° East

In EGNOS system region (Europe and Africa)
<%d> = 120 for Inmarsat 3F2 AOR-E 15.5° West

<%d> = 124 for Artemis 21.5° East

<%d> = 126 for Inmarsat 3F5 IOR-W 25.0° East

In MSAS system region (Japan, Australia and Hawaii)
<%d> = 129 for MTSAT 1
<%d> = 137 for MTSAT 2

3.8 NMEA Protocol Support

The TX Oncore Positioning Receiver firmware supports the NMEA 0183 format for GPS data output. Output of data in the NMEA-0183 standard format allows a direct interface via the serial port to electronic navigation instruments that support the specific output messages. NMEA formatted messages may also be used with most commercially available mapping and tracking programs. Please refer to the i-Lotus NMEA Protocol Specifications document.

4 Module Pin Layout

The RX Oncore receives electrical power and input/output signals (including RF_in) through an array of 28 gold pads. Below are illustrations of the pin layout, orientation, numbering, and measurements.

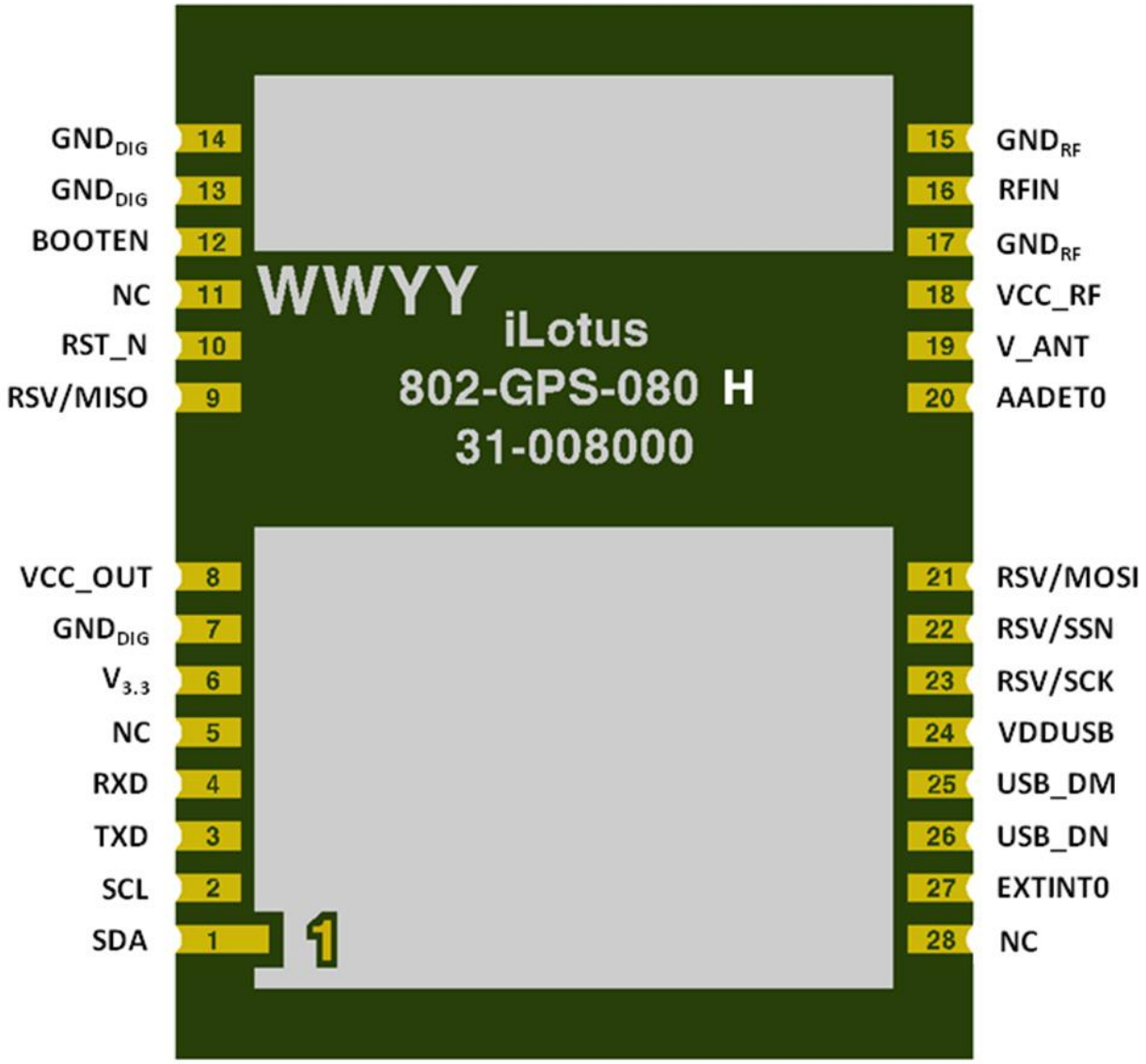

Fig 4.1 28 pin layout (Bottom view)

5 Pin Definition

Pin	Pin Name	Function	Type	Default Value	Internal Resistance
1	SDA	I^2C Interface	I/O	—	—
2	SCL	I^2C Interface	I/O	—	—
3	TXD	UART Interface	O(I)	High	100K
4	RXD	UART Interface	I	High	100K
5	NC	Reserved	X	—	—
6	$V_{3.3}$	Vcc – Main supply power 3.3V	I	—	—
7	GND	GND (Digital)	I	—	—
8	VCC_OUT	Output Voltage	O	—	—
9	RSV/MISO	SPI Interface	I	—	—
10	RST_N	Module Reset	I	High	100K
11	NC	Reserved	X	—	—
12	BOOTEN	Firmware Reflash	I	Low	100K
13	GND	GND(Digital)	I	—	—
14	GND	GND(Digital)	I	—	—
15	GND	GND(RF)	I	—	—
16	RFIN	GPS Signal input	I	—	—
17	GND	GND(RF)	I	—	—
18	VCCRF	2V7RF – Output Supply	O	—	—
19	V_ANT	Supply Power for active antenna (3 to 5 VDC)	I	—	—
20	AADET0	Active antenna detection	I	Low	100K
21	RSV/MOSI	SPI Interface	O	—	—
22	RSV/SSN	SPI Interface	Reserved	—	—
23	RSV/SCK	SPI Interface	O	—	—
24	VDDUSB	NC	X	—	—
25	USB_DM	USB / CAN Interface	I/O	—	—
26	USB_DN	USB / CAN Interface	I/O	—	—
27	EXTINT0	External Interrupt	I	High	100K
28	NC	Reserved	Reserved	—	—

6 Mechanical Dimensions

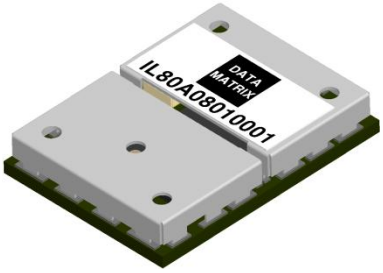

ISOMETRIC VIEW

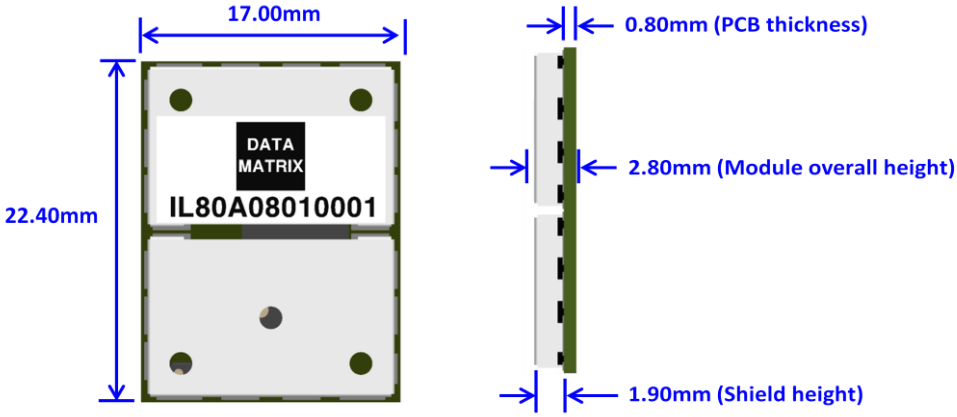

FRONT VIEW SIDE VIEW

BACK VIEW

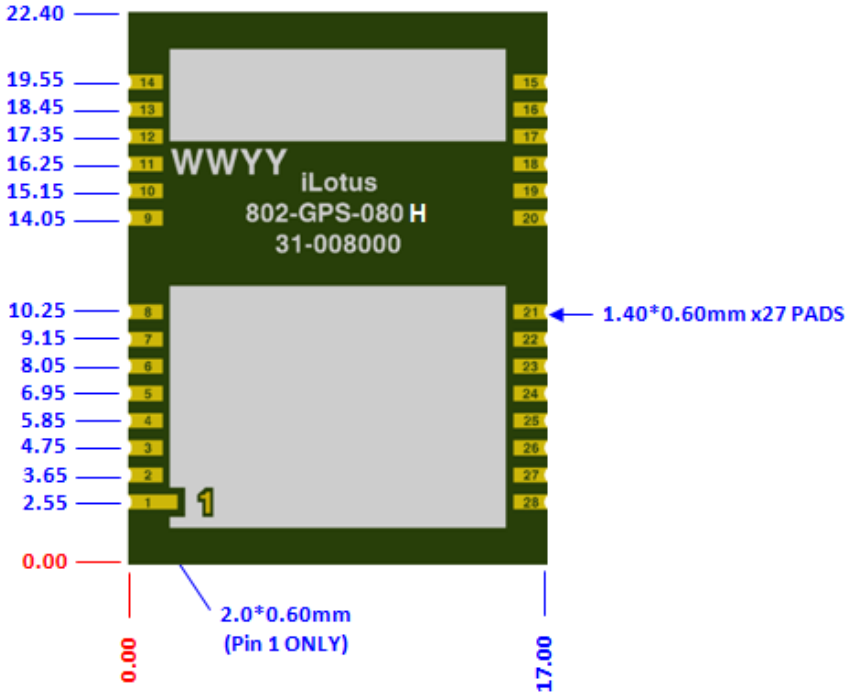
22.40
19.55
18.45
17.35
16.25
15.15
14.05
10.25
9.15
8.05
6.95
5.85
4.75
3.65
2.55
0.00
WWYY
iLotus
802-GPS-080 H
31-008000
1.40*0.60mm x27 PADS
2.0*0.60mm
(Pin 1 ONLY)
0.00
17.00

7 Packaging Detail

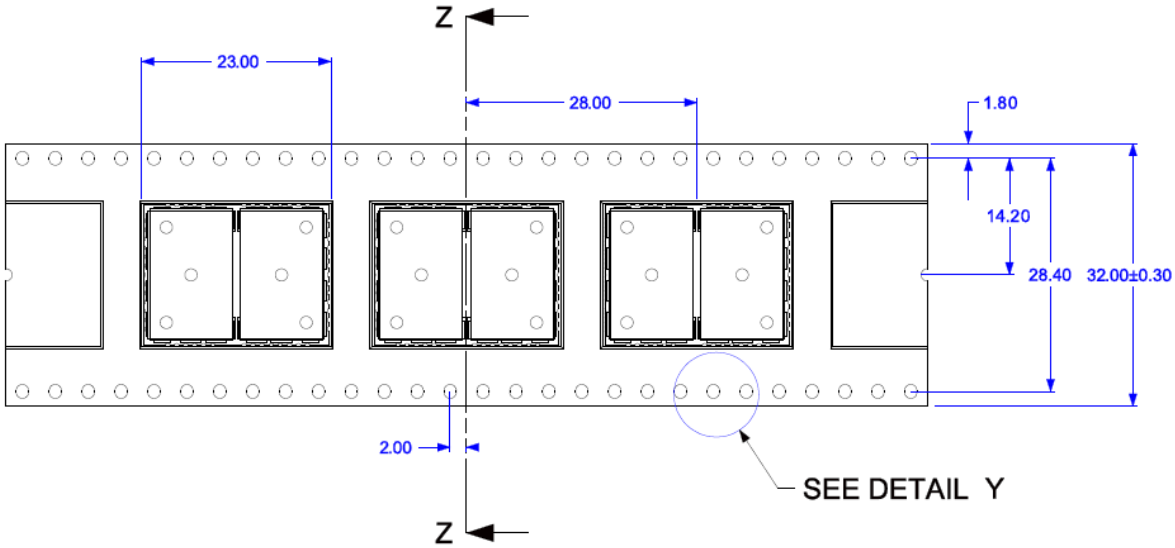

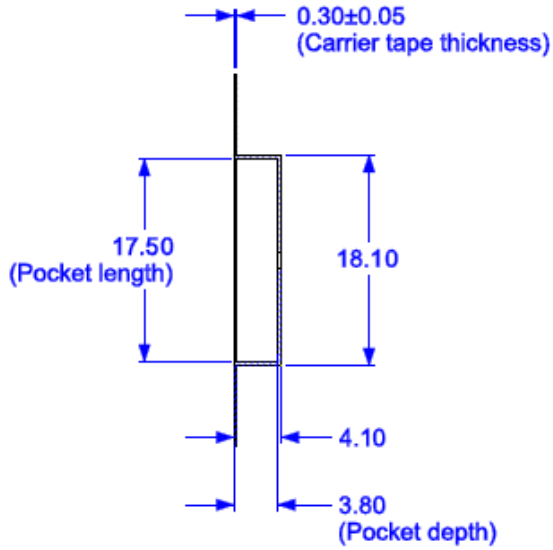

SECTION Z-Z
(CARRIER ONLY)

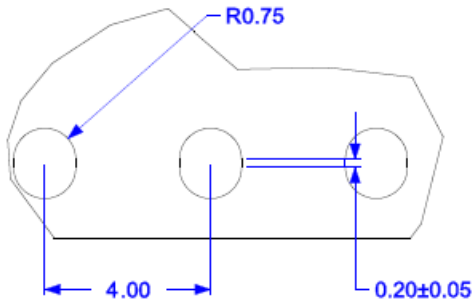

DETAIL Y
SCALE 4.000

8 Module Installation Considerations

Every RX Oncore receiver has been carefully inspected and packaged to ensure optimum performance and quality assurance. As with any piece of electronic equipment, proper installation is essential before you can use the equipment. When mounting the RX Oncore receiver board into your housing system, special precautions need to be considered. Before you install the receiver, please review the following:

8.1 Electrostatic Precautions

The RX Oncore printed circuit boards (PCBs) contain parts and assemblies sensitive to damage by electrostatic discharge (ESD). Use ESD precautionary procedures when handling the PCB. Grounding wristbands and anti-static bags are considered standard equipment in protecting against ESD damage.

8.2 Electromagnetic Considerations

The RX Oncore receiver PC boards contain a very sensitive RF receiver; therefore you must observe certain precautions to prevent possible interference from the host system. Because the electromagnetic environment will vary for each OEM application, it is not possible to define exact guidelines to assure electromagnetic compatibility. The frequency of GPS is 1.575 GHz. Frequencies or harmonics close to the GPS frequency may interfere with the operation of the receiver, desensitizing the performance. Symptoms include lower signal to noise values, longer TTFFs and the inability to acquire and track signals. In cases where RF interference is suspected, common remedies are to provide the receiver with additional RF shielding and/or moving the antenna away from the source of the interference.

8.3 RF Shielding

The RF circuitry sections on the RX Oncore are surrounded with an RF dam to provide some protection against potential interference from external sources. When a design calls for the RX Oncore to be near or around RF sources such as radios, switching power supplies, microprocessor clocks, etc., it is recommended that the RX Oncore be tested in the target environment to identify potential interference issues prior to final design. RX Oncore PCB has an additional metal shield to eliminate electromagnetic compatibility (EMC) problems.

8.4 RoHS Consideration

As an ISO 9001 certified company, i-Lotus takes great precautions in industrial health and safety. The RX Oncore has been officially certified as a RoHS compliant module. If required, all supporting documents regarding the RoHS material used on RX Oncore will be given upon request.

8.5 SMT Reflow Profile

The RX Oncore module is a surface mount device. It has the capability to be manually soldered or mounted using a Solder Reflow Process. Below is the recommended lead Free Solder Reflow Profile.

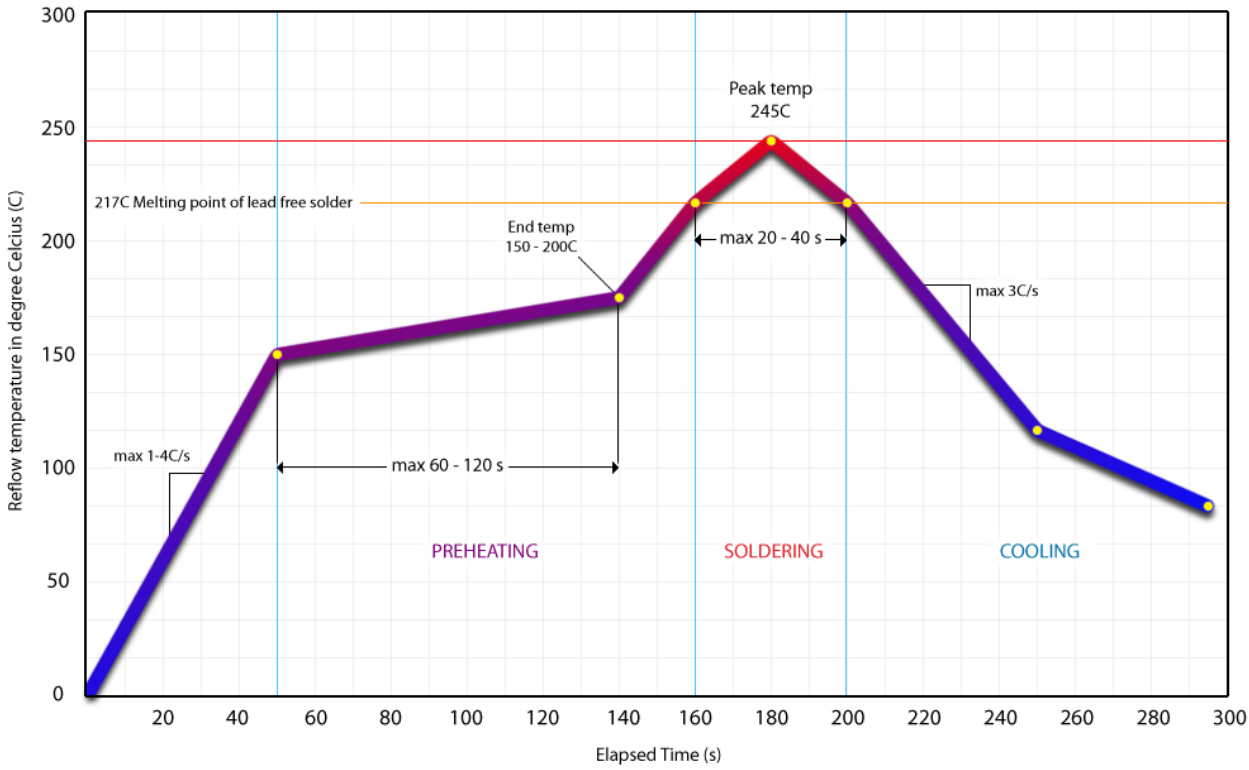

9 Ordering Information

The RX Oncore module can be ordered using the following part number:

- ✓ **IL-GPS-0070-B**

The RX Oncore Evaluation Kit can be ordered using the following part number:

- ✓ **IL- GPS-EVK-0070-UA (UART/USB)**